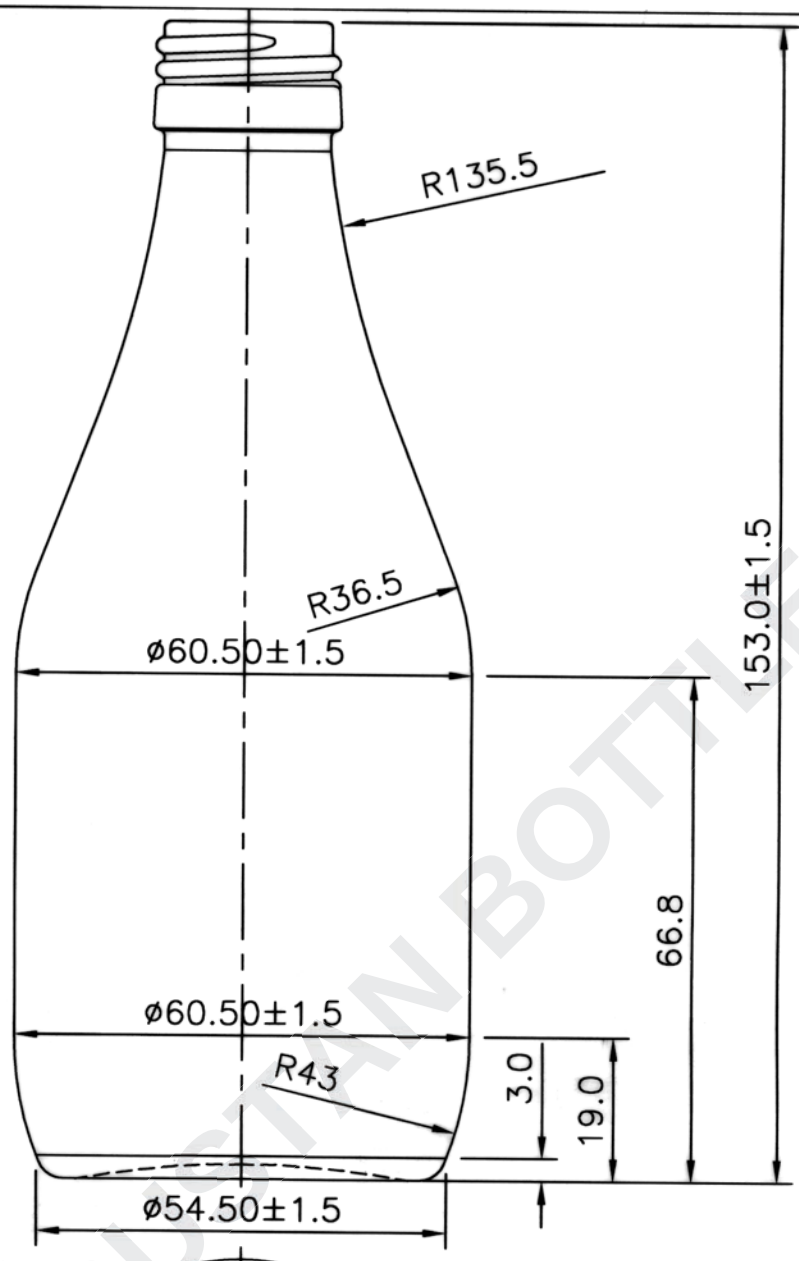

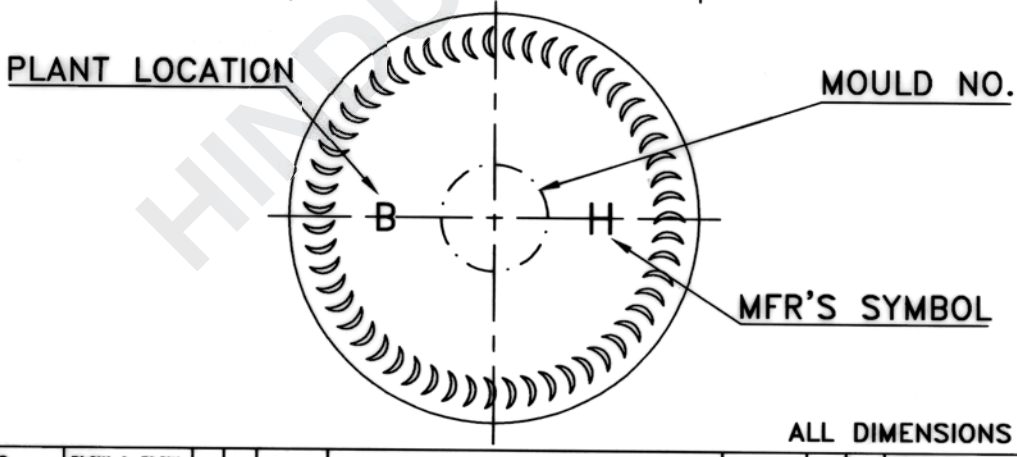

ALL DIMENSIONS ARE IN MILLIMETERS

PROCESS	BLOW & BLOW							
MINIMUM THROUGH BORE	–							
FILL POINT VERIFIED	NO							
TILT ANGLE	–	No.	REV.No.	REVISION	DATE	CHK	DRC	
MAXIMUM DEPTH OF STANDARD ENGRAVING	–	FILL–POINT	-- ml ± – ml					
MAX. GAS VOLUMES	–	BRIMFUL CAP.	220 ml 5 ml					
REF DRG No : W/AMB/B/2134		WEIGHT	165.0 GMS. ± 10.0 GMS.					
MOULD EQUIPMENT ORDERED BY		FINISH	25 MM. R.S.P.P. STD.		COLOUR	AMBER		
PLANT	B	SURFACE TREATMENT	NO		C.C. NO. 42551			

SPECIFICATION AGREEMENT ARE BASED ON TOLERANCED DIMENSIONS ONLY
DO NOT SCALE DRAWING
COPYRIGHT RESERVED. NOT TO BE COPIED IN WHOLE OR PART WITHOUT WRITTEN PERMISSION FROM H.N.G.& I. LTD.

HINDUSTHAN NATIONAL GLASS & IND. LTD.

TITLE: 200 ML AMB. NUTRAFIL BOTTLE

CUST: M/s LUPIN LABORATORIES LTD. CHECKED:

DRAWN: Rajesh 11.09.2003 APPROVED:

SCALE 1:1 DRAWING No. 42551 A4 REV.

HINDUSTAN BOTTLES